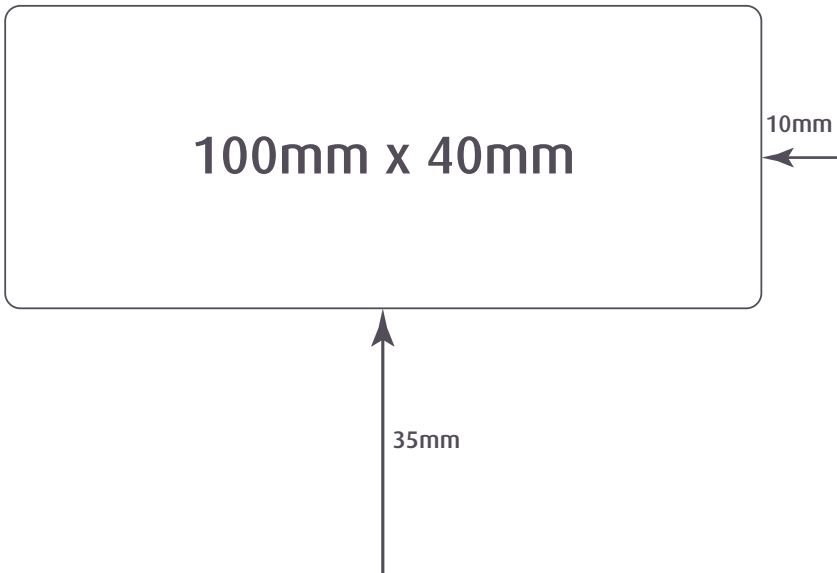
100mm x 40mm
10mm
35mm